Vola 172 Shower Set

Originally designed by Arne Jacobsen in the 1960’s this iconic tapware range has stayed contemporary ever since and is renowned the world over. Made in Denmark, it has been specified in many of the world’s most amazing commercial and residential fit-outs. Owning Vola is owning a piece of design history.

Features: One-handle build-in mixer with ceramic disc technology. Comes with hand shower and holder with non-return valve (070), two-hole plate 60x153mm (002).

Finish: Available in all Vola finishes.

Options: Available with a 25, 55 (M) or 100mm (L) lever.

WELS: 3 STAR Rated. 9 L/min. Registration number S14003 (070)
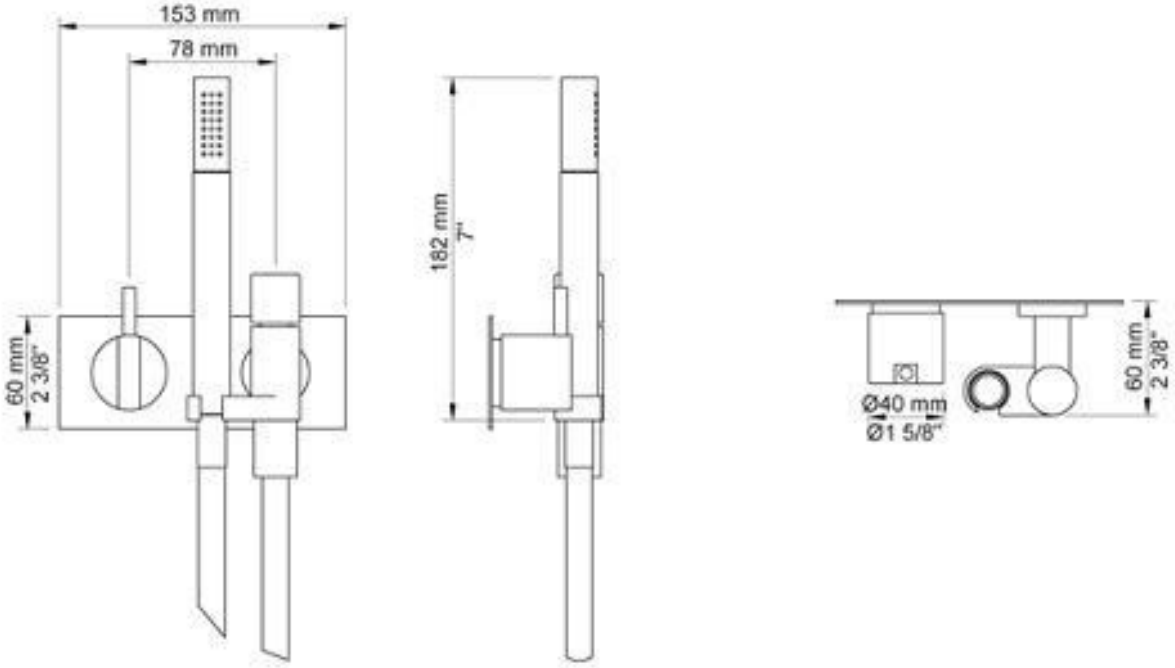
Specifications