H2 Heated Rail 700 High

The H Series combines sleek design and superb functionality. Its additional clustered bars provide enhanced towel warmers and drying. H Series models can also be used to deliver ambient bathroom heating (subject to sizing and finish) and also looks good as designer bathroom accessories.

Dimensions: (400, 500, 600, 700, 800, 900, 1000)mm W (centre to centre), 700mm H x 90mm D

Finish: Chrome

Options: Wiring left or right side. Spacing: 80mm between bars (centre to centre) 160mm between sets (2 sets) Tube: Vertical 25mm, Horizontal 19mm Wattage (electric): 70 – 200 (subject to width)
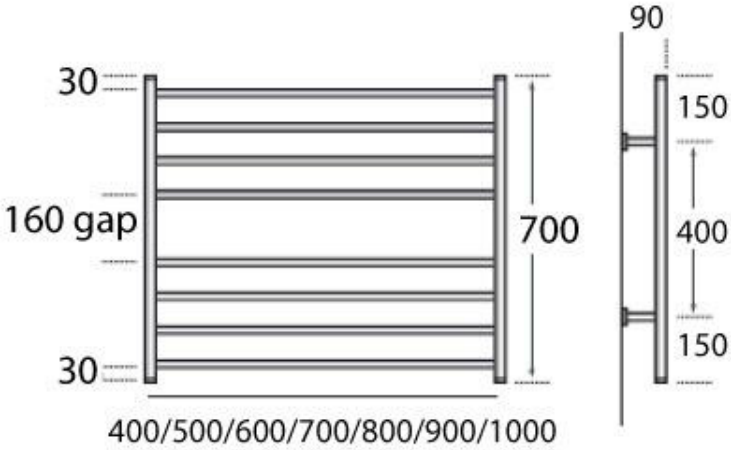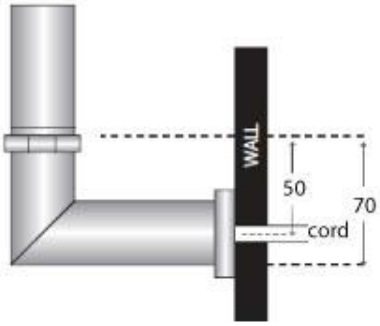
Specifications