TR3 Heated Rail 1500 High

The TR series perfects simplistic design and practicality. The evenly spaced rails make the TR Series ideal for drying towels. Its generous gaps allow bulky fabrics to be draped over with ease.

Dimensions: (400, 500, 600, 700, 800, 900)mm W (centre to centre), 1500mm H x 90mm D.
Spacing: 160mm between bars (centre to centre)
Tube: Vertical 25mm, Horizontal 19mm Wattage (electric): 100 – 200 (subject to width)

Finish: Chrome

Options: Wiring left or right side.
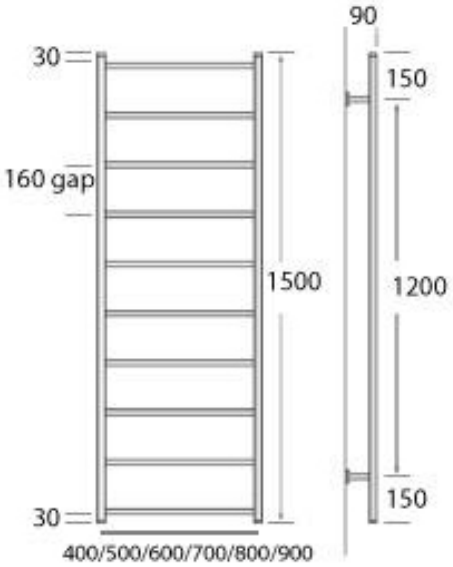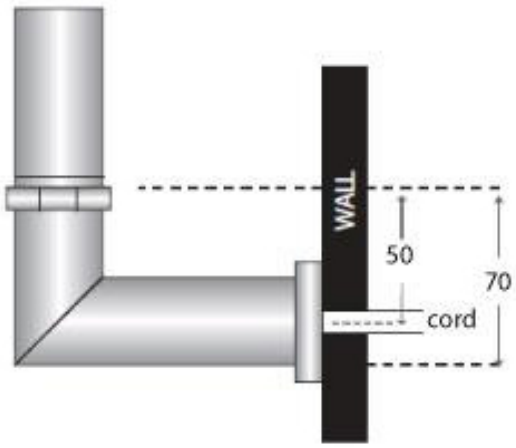
Specifications