# Vola 4111 Electronic Mixer w/ Regulator

Originally designed by Arne Jacobsen in the 1960's this iconic tapware range has stayed contemporary ever since and is renowned the world over. Made in Denmark, it has been specified in many of the world's most amazing commercial and residential fit-outs. Vola tapware is available in a number of configurations and special finishes including a range of bright colours. Owning Vola is owning a piece of design history.

Features: Build-in basin mixer with on-off sensor for 'hands free' operation, with temperature regulation.

Finish: Available in all Vola finishes.

WELS: 6 STAR Rated. 5 L/min. Registration number T29217

For more info on this product, please visit the Vola website.
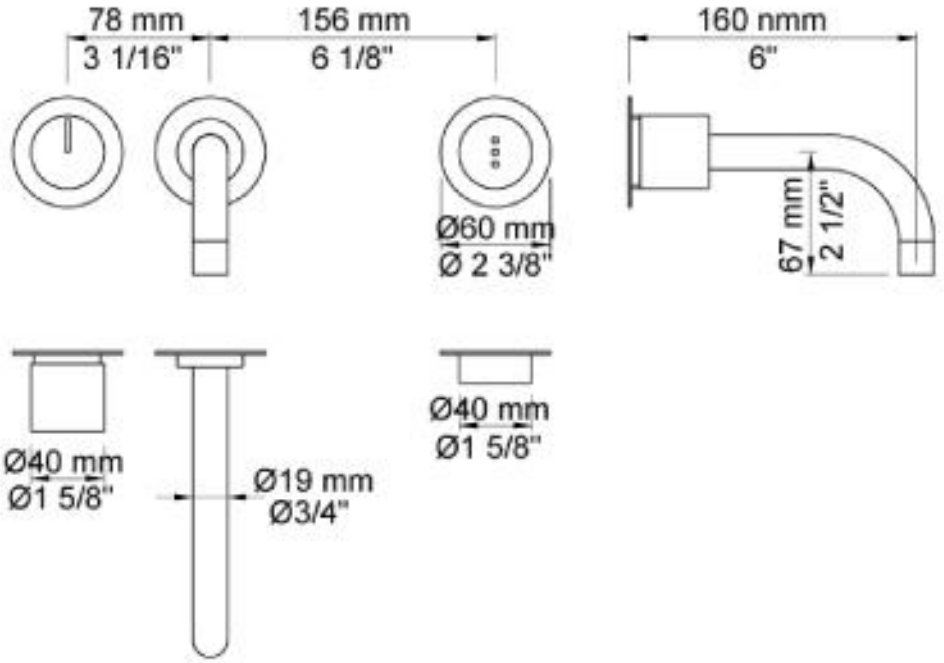
## Specifications