Piazza Plus Single Bowl

Piazza Plus by Abey Australia.

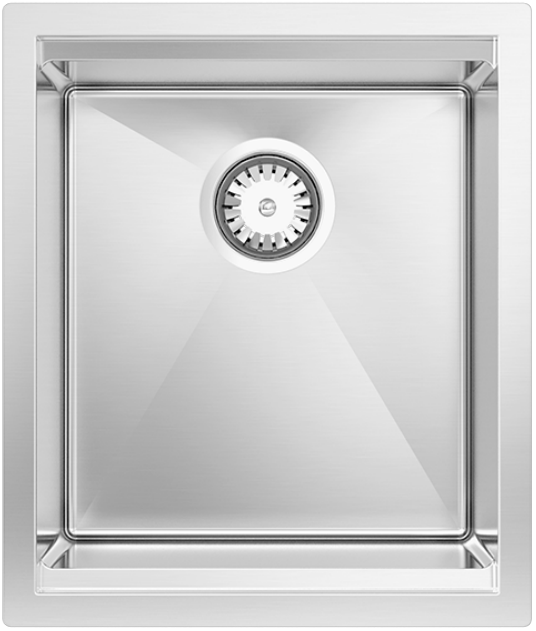

Features: Includes a stainless steel drain tray & designer basket waste

Dimensions: 380mm W x 450mm D (Internal 340mm W x 380mm D x 192mm H)

Finish: Stainless Steel

Installation: Can be flush-mounted or inset. Always use the physical measurements for cut outs – the manufacturer’s template is supplied as a guide only

Specifications

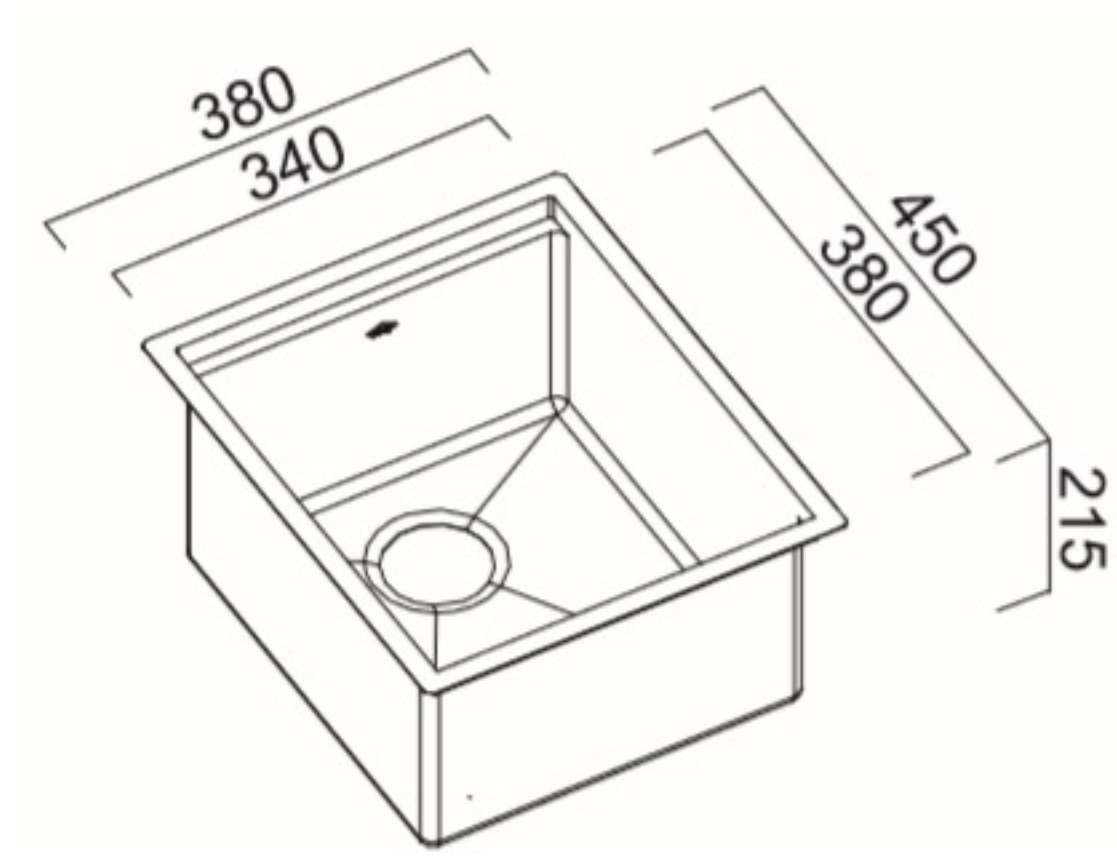
380
340
450
380
215