The Brisbane Undermount

The NuQueen undermount range by Abey allows you to create a smooth continuous bench top whilst gaining all the benefits of a quality 18/10 stainless steel sink. Large 200mm deep machine polished bowls, rear designer wastes to give you more cupboard space and multiple bowl options.

Features: One and 3/4 bowl. Small bowl on right hand side only. Includes a stainless steel drain tray, bamboo cutting board and designer basket wastes

Dimensions: 692mm W x 458mm D (Bowl sizes 356mm W x 406mm D x 200mm H, 254mm W x 406mm D, 180mm H)

Finish: Stainless Steel

Installation: Always use the physical measurements for cut outs – the manufacturer’s template is supplied as a guide only

Specifications

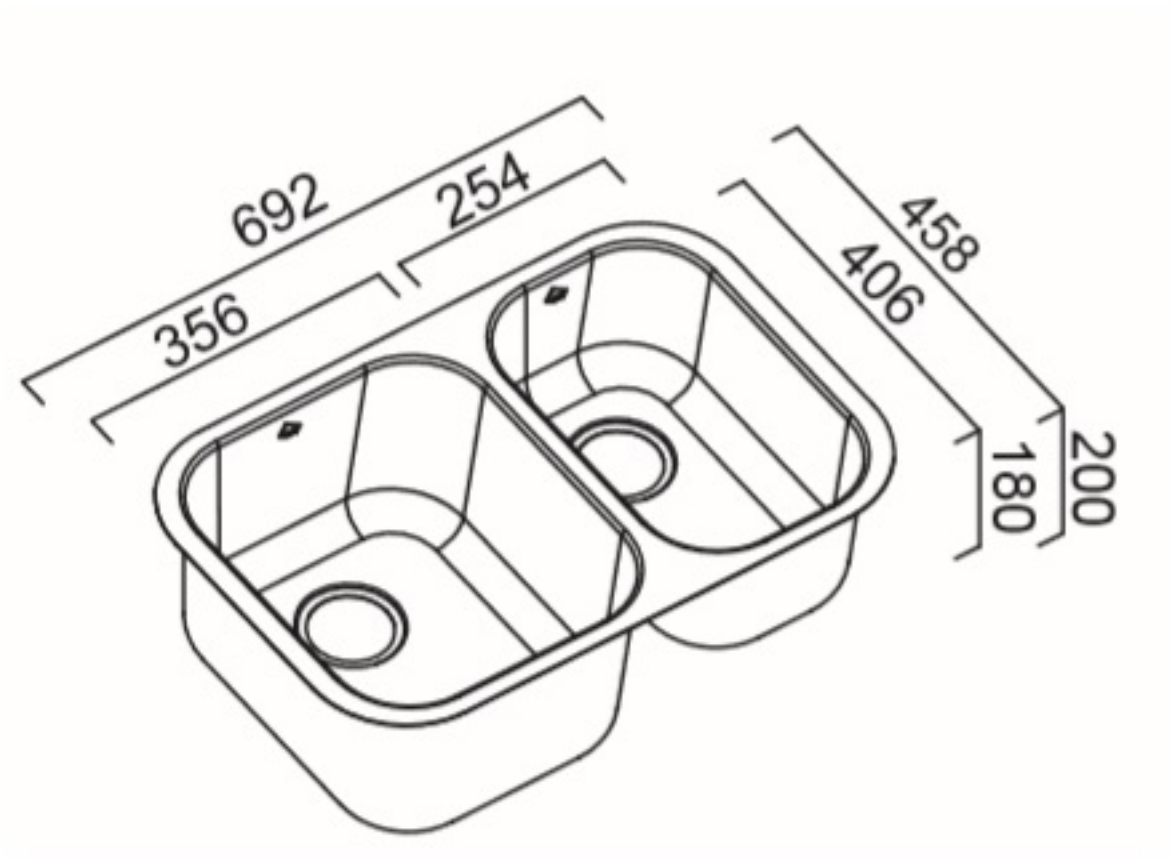
692
254
356
458
406
200
180