Vola FS3 Floor Shower

Free-standing thermostatic shower with hand shower. Originally designed by Arne Jacobsen in the 1960’s this iconic tapware range has stayed contemporary ever since and is renowned the world over. Made in Denmark, it has been specified in many of the world’s most amazing commercial and residential fit-outs. Vola tapware is available in a number of configurations and special finishes including a range of bright colours. Owning Vola is owning a piece of design history.

Finish: Available in all Vola finishes.

Installation: When installed outdoor the FS3 must be removed when temperature drops below the freezing point of water 0°C/32°F. Store dry and free of frost. If the floor covering is greater than 15 mm, extensions should be specified when ordering the FS3. All extensions supplied with the FS3 are free of charge.

WELS: 2 STAR Rated. 10.5 L/min. Registration number S10836 (080ST), 3 STAR Rated. 8 L/min. Registration number S12249 (T2)
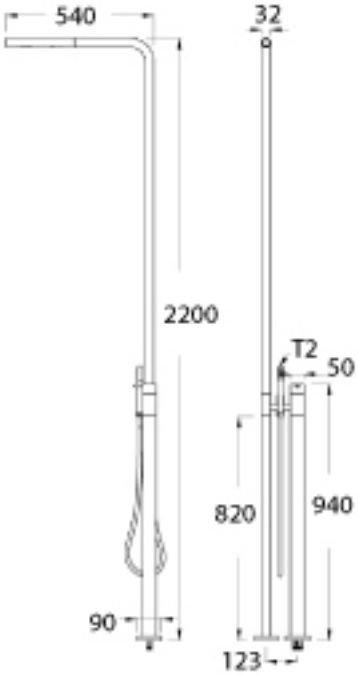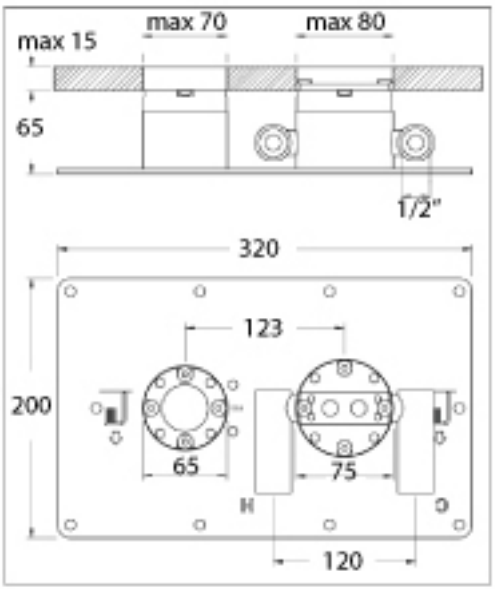
Specifications