Ravine 66 x 51 Fine Fireclay Inset Sink

The Ravine fine fireclay sink collection is the perfect addition to any classic or contemporary styled kitchen, butler’s pantry or laundry. Handcrafted to perfection offering a lifetime warranty with plug & waste and overflow. The tap landing makes it great for laminate benchtops.

Made in Europe, the high quality fireclay and glazing is highly durable. This sink is thermal shock resistant, which means it can withstand fast changes in temperatures such as boiling water, which makes it stand out from other sinks on the market. The sink is highly stain, scratch and chemical resistant, making it more hygienic than most sinks on the market. Adding to the unique beauty of this sink is it’s fine fireclay composition, which is a stronger and less brittle product than ceramic, making it highly. With a lifetime warranty, you cannot go wrong with a Turner Hastings sink.

Dimensions: 660mm W x 506mm D x 236mm H

Capacity: 45L

Colours: White gloss

Waste: 40x50mm plug and waste with overflow included

Taphole: 1 only

Specifications

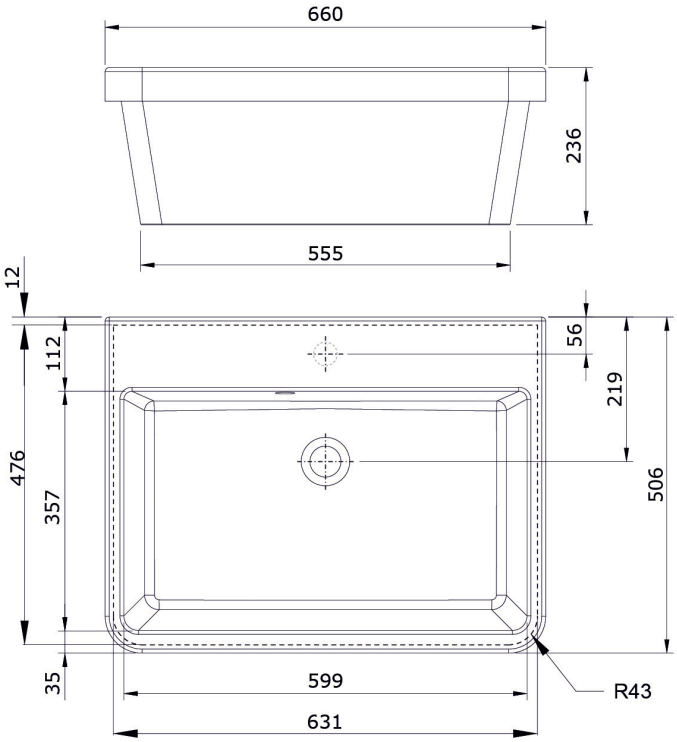
660
236
555
12
112
476
357
35
56
219
506
599
631
R43

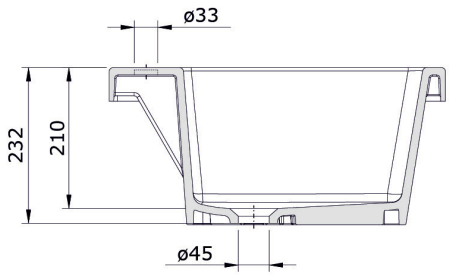
ø33
232
210
ø45