Cuisine Round 47 Inset / Undermount Fine Fireclay Sink

The Cuisine 47 Round is perfect for the modern kitchen, or could also be used as a luxury bar sink. It has been intelligently designed to be installed either inset or undermount. Install undermount and cut a drainer into the stone top for practicality plus wow factor! A white gloss glazed finish finishes a kitchen or similar application in a luxurious style. Made in Europe, the high quality fireclay and glazing is highly durable. This sink is thermal shock resistant, which means it can withstand fast changes in temperatures such as boiling water, which makes it stand out from other sinks on the market. The sink is highly stain, scratch and chemical resistant, making it more hygienic than most sinks on the market. Adding to the unique beauty of this sink is it’s fine fireclay composition, which is a stronger and less brittle product than ceramic, making it highly durable against the impacts of daily washing up. With a lifetime warranty, you cannot go wrong with a Turner Hastings sink. It includes a free basket waste to suit. Protect the base of your sink – use the stainless steel grid or rubber sink mat available (purchased separately).

Dimensions: 470mm Dia x 228mm H

Capacity: 27L

Colours: White gloss

Waste: 90x50mm Basket Waste included

Mounting options: Inset & undermount

Features: Suitable for use with food waste disposer – we recommend purchase of an extended flange and a model with anti-vibration collar

Specifications

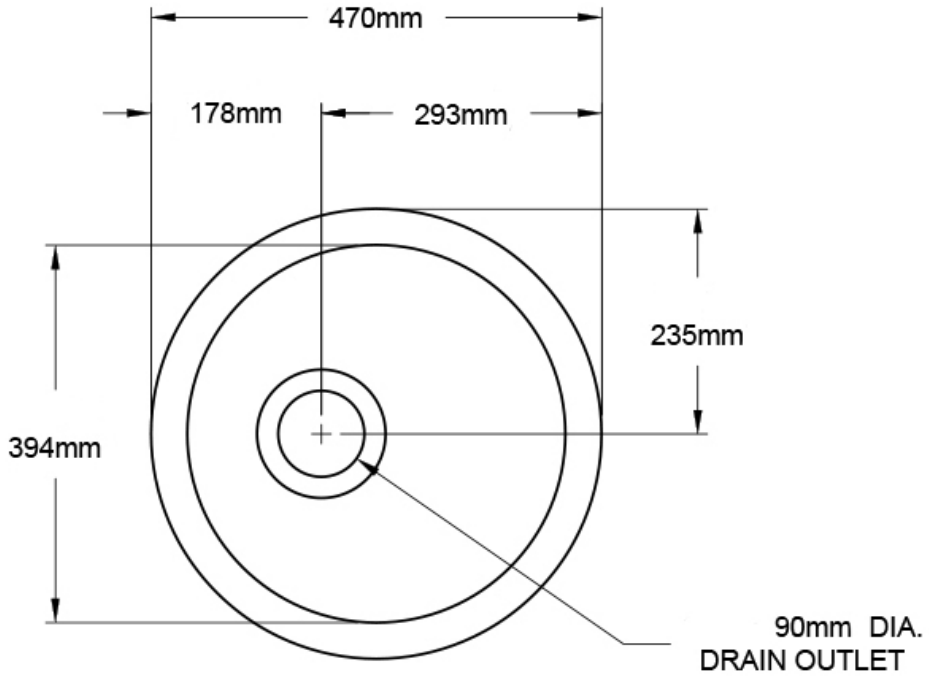
470mm
178mm
293mm
235mm
394mm
90mm DIA.
DRAIN OUTLET

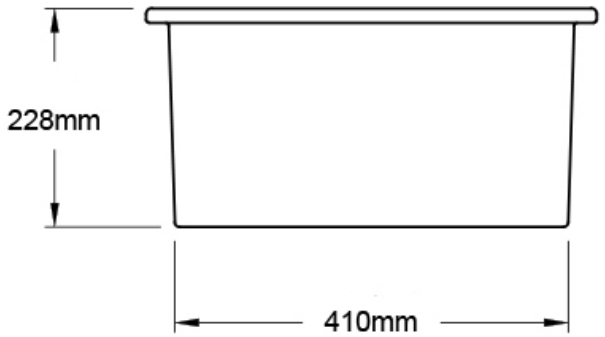
228mm
410mm