Cuisine 81 x 48 Inset / Undermount Fine Fireclay Sink

The Cuisine 81 is perfect for the modern kitchen. It has been intelligently designed to be installed either inset or undermount. Install undermount and cut a drainer into the stone top for practicality plus wow factor!

A white gloss glazed finish finishes a kitchen or similar application in a luxurious style. Match it up with one of the other two square-shaped sinks in the range and place them side by side for a bowl-and-a-half design. Made in Europe, the high quality fireclay and glazing is highly durable. This sink is thermal shock resistant, which means it can withstand fast changes in temperatures such as boiling water, which makes it stand out from other sinks on the market.

The sink is highly stain, scratch and chemical resistant, making it more hygienic than most sinks on the market. Adding to the unique beauty of this sink is it’s fine fireclay composition, which is a stronger and less brittle product than ceramic, making it highly durable against the impacts of daily washing up. With a lifetime warranty, you cannot go wrong with a Turner Hastings sink. It includes a free basket waste to suit. Protect the base of your sink – use the stainless steel grid or rubber sink mat available (purchased separately).

Dimensions: 810mm W x 480mm D x 254mm H

Capacity: 58L

Colours: White gloss

Waste: 90x50mm Basket Waste included

Mounting options: Inset & undermount

Features: Suitable for use with food waste disposer – we recommend purchase of an extended flange and a model with anti-vibration collar

Specifications

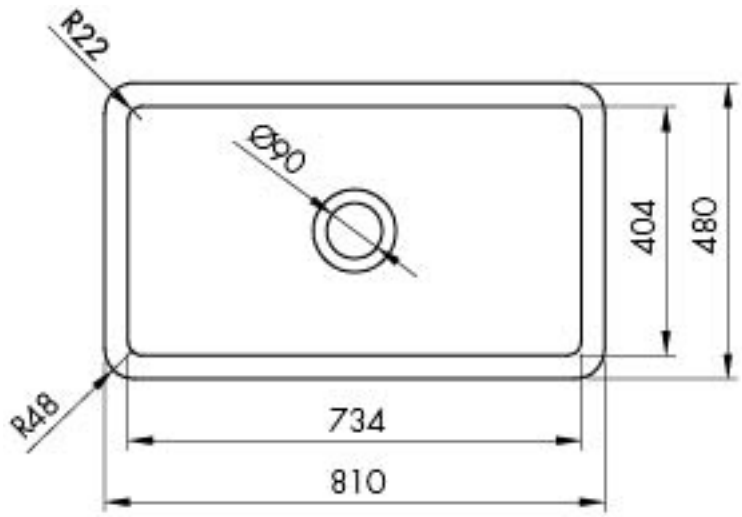
R22
Ø90
404
480
R48
734
810

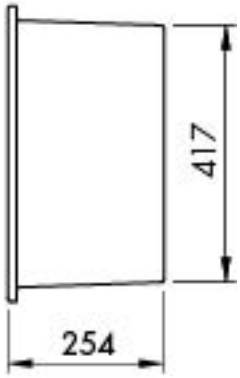
417
254

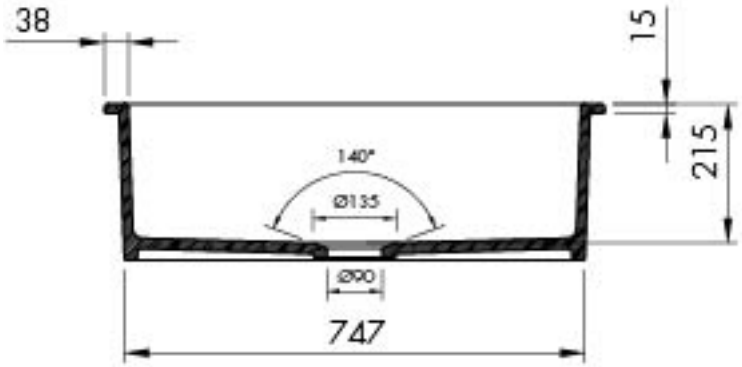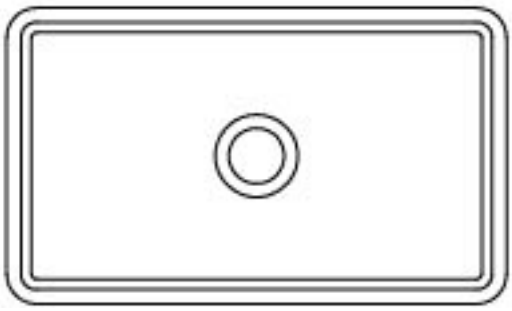
38
15
215
140°
Ø135
Ø90
747