Rettangolo K Diverter Mixer

Since its launch in 2002, architects and home interior enthusiasts have loved and employed the original Rettangolo range by Gessi in the world’s most beautiful projects. Rettangolo is a conceptual product considered, due to its perfect harmony, an absolute, immutable accomplishment. In life, however, disruptions can serve as the catalyst to the process of regeneration, eventually resulting in new and different forms of beauty and perfection. The sensational Rettangolo K demonstrates how this can be true even for disruptions in the perfect harmony and established shape of an icon. K’s concept consists in having slivered Rettangolo silhouette with a bold diagonal cut. Together with the resulting bent lever, the cut designs the fascinating signature “K” of the Line: the iconic Rettangolo has generated a new piece of art.

Designed and Manufactured in Italy

Finish: Chrome, Black, Black Metal, Black Metal brushed, Brushed nickel, Copper

Installation: Supplied in two-parts. Must be installed at a pressure no greater than 500Kpa. Failure to do so will void the warranty.

Specifications

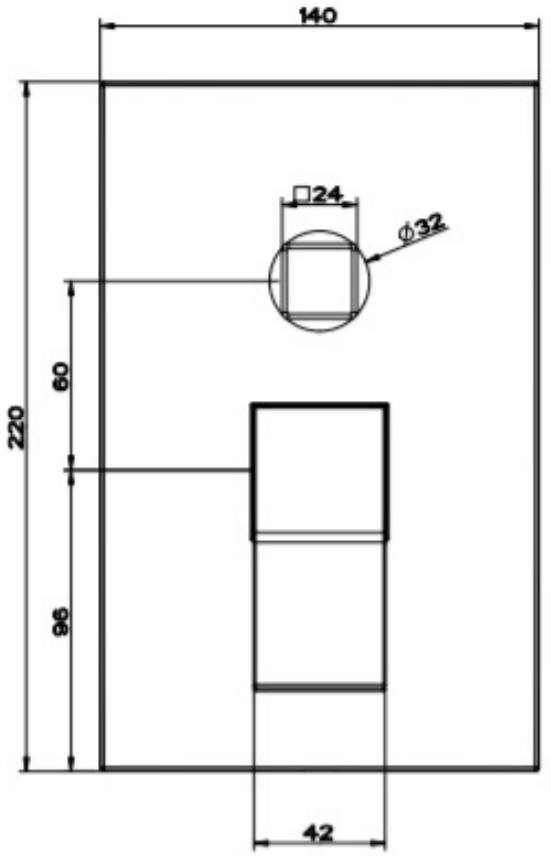

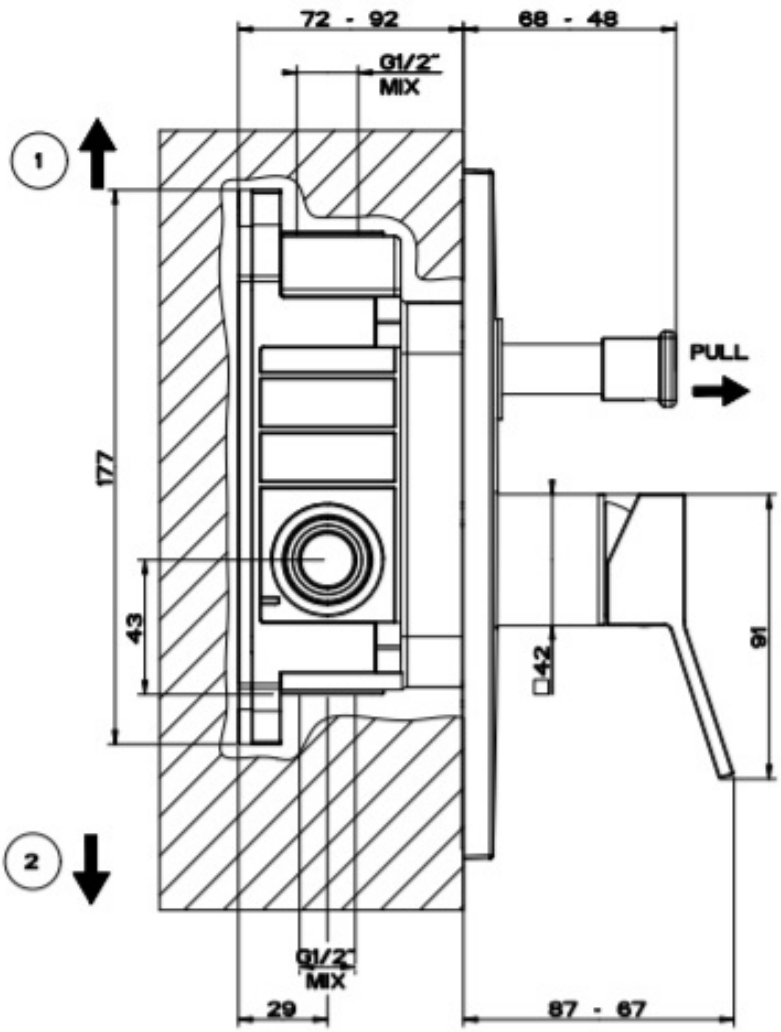

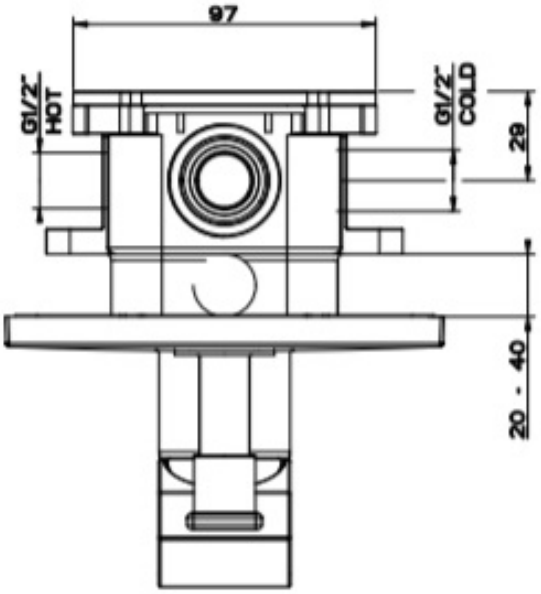

1 PRIMARY OUTLET

2 SECONDARY OUTLET