Kaali 46 Basin

A deep oval basin designed for undermount installation into a countertop of choice. Features an internal overflow.

Dimensions: 466mm W x 353mm D x 140mm H

Colour: White

Material: Made from QUARRYCAST® One piece casting of rare volcanic limestone and resin. Harder and more durable than acrylic. Easy clean high gloss finish.

Waste: 32mm

Warranty: 25 year guarantee

Installation: Refer to installation instructions supplied with basin for additional information.

Specifications

Top view

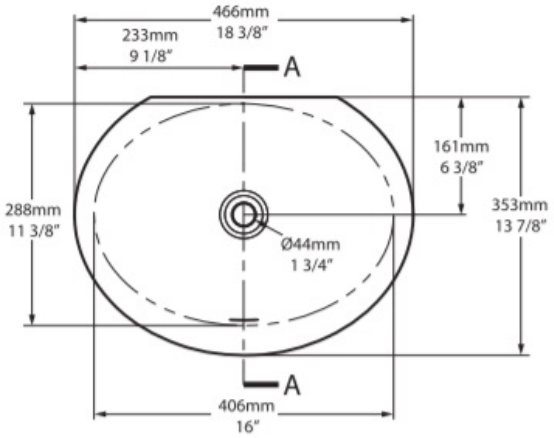

Side view

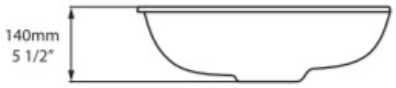

Front view

Section AA

*All measurements subject to +/-5% tolerance