Taizu Round Bath

Taizu by Victoria & Albert is our first collaboration with renowned Hong Kong based designer Steve Leung, who is known for using Asian influences in his designs.

The opulent circular bath has been inspired by the fine porcelain designs of the Song Dynasty. The gently sloping sides are softened by a chamfered edge and sculpted detail at the base. With a diameter of 1500mm, Taizu is a spa-style centrepiece that is at home in the most luxurious bathrooms.

Dimensions: 1500 L x 1500 W x 600mm H x 480mm D

Colour: White. Exterior can be painted in six standard paint finishes and V&A are now offering a spectrum of 194 RAL colours, in either gloss or matt finishes. View V&A's **colour finishes** page for more information.

Material: QUARRYCAST®. One piece casting of rare volcanic limestone and resin. Harder and more durable than acrylic. Easy clean high gloss finish.

Volume: 490 litres

Weight: 95kg

Waste: 40mm

Warranty: 25 year guarantee

Installation: Instructions supplied with bath for additional information.

Specifications

TAI-N-SW-NO

Top view

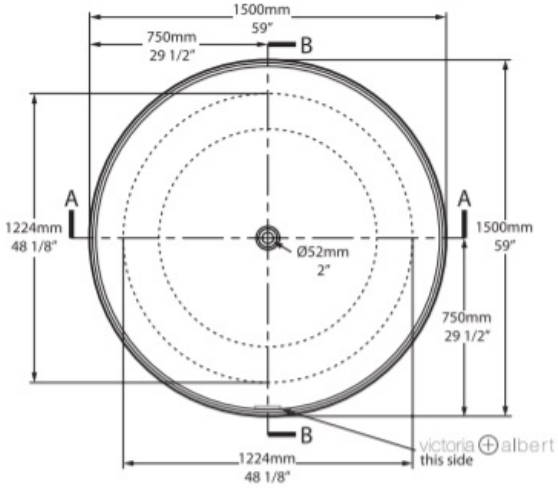

Front view

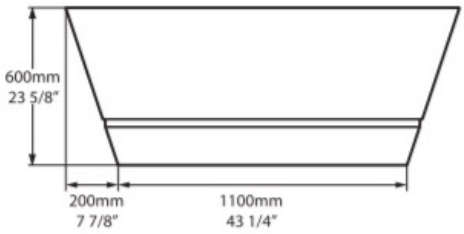

Section AA / Section BB

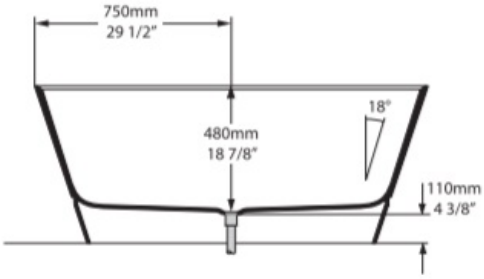

Side view

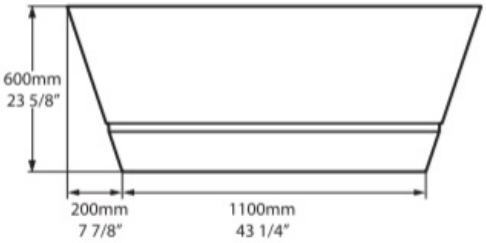

***All measurements subject to +/-5% tolerance**
***Overflow hole not drilled**