Pembroke Bath

Named after the birthplace of England's first Tudor king, the Pembroke soaking tub by Victoria & Albert evokes a regal elegance, accented by crisp corners and a neat rim. A deep and dual-ended bath, the Pembroke provides a luxurious soaking experience. Designed by Meneghello Paolelli Associati.

Dimensions: 1765mm L x 798mm W x 578mm H x 442mm D

Colour: White. Exterior can be painted in six standard paint finishes and V&A are now offering a spectrum of 194 RAL colours, in either gloss or matt finishes. View V&A's **colour finishes** page for more information.

Material: QUARRYCAST®. One piece casting of rare volcanic limestone and resin. Harder and more durable than acrylic. Easy clean high gloss finish. Exterior can be painted.

Volume: 350 litres

Weight: 88kg

Waste: 40mm

Warranty: 25 year guarantee Installation: Refer to installation instructions supplied with bath for additional information.

Specifications

Top view

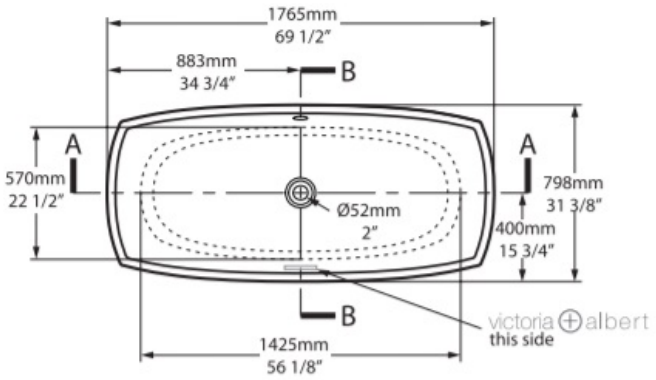

Front view

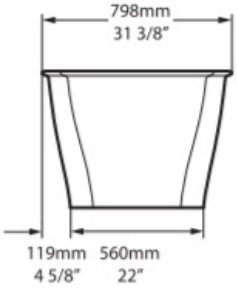

Side view

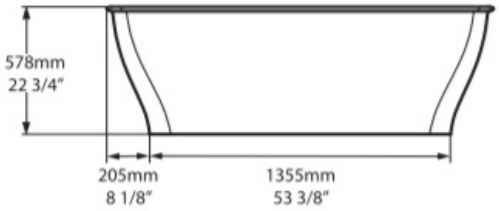

Section AA
Shown with K12 waste kit

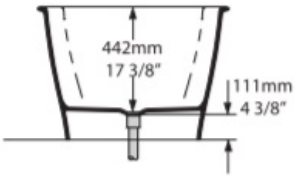

Section AA

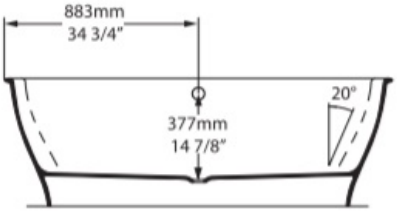

***All measurements subject to +/-5% tolerance**
***Overflow hole not drilled**