Cono 470 Undercounter

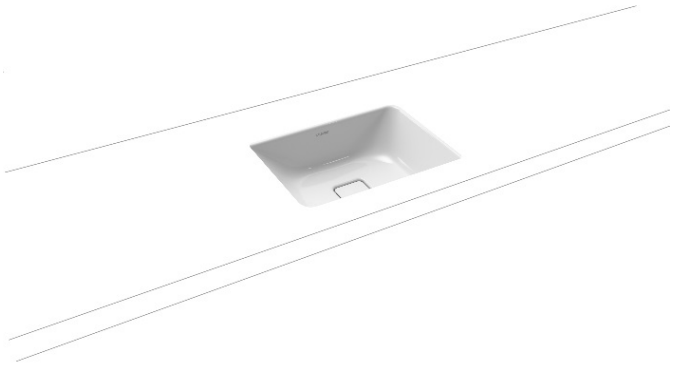

Made of superb KALDEWEI steel enamel, the aesthetic quality and user-friendliness of the Cono washbasins combine to produce the perfect symbiosis of clarity and serenity.
The square, enamelled outflow accentuates the underlying geometry of this sublime washbasin. In addition to its exceptional design, it captivates with a special technical feature: the overflow is invisibly integrated into the run-off support. There is no overflow hole to detract from the design’s clean lines. The CONO washbasin thus exudes perfect elegance and harmony.

Dimensions: 470mm W x 381mm D x 112mm H

Colour: White

Material: 3.5mm Kaldewei Steel Enamel

Waste: CLOU waste and overflow system supplied with basin

Tapholes: No taphole only

Specifications

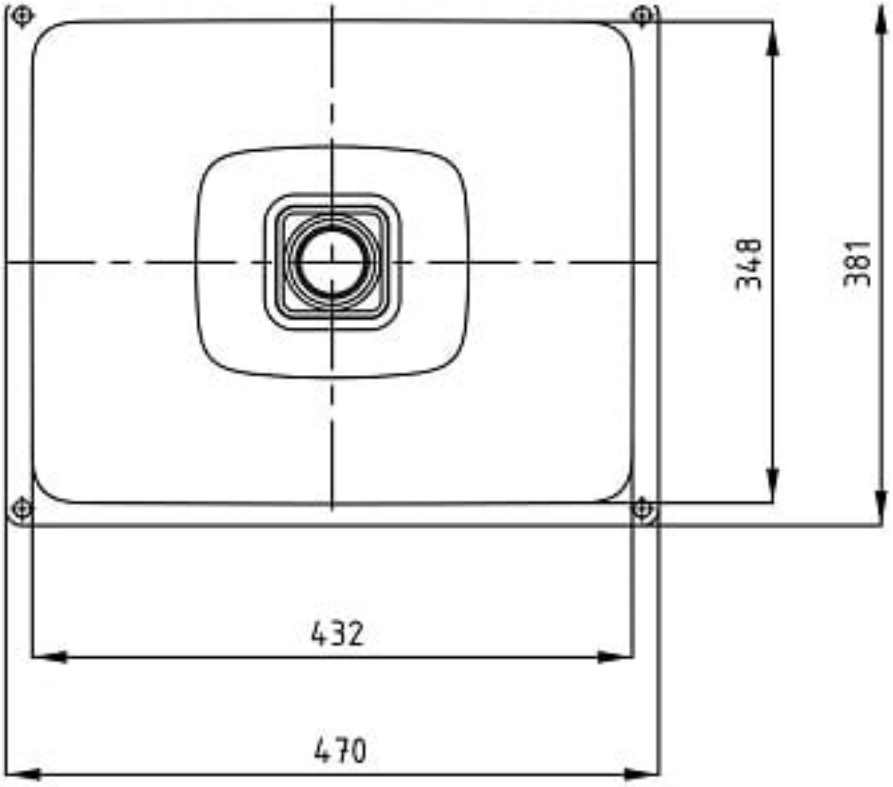
348
381
432
470

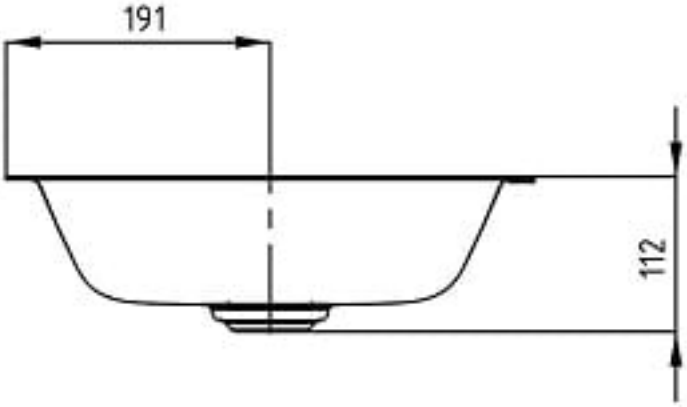
191
112