Ellipso Duo Oval 1900 x 1000

This new release from Kaldewei offers the ultimate in luxurious bathing and purity of design. Gently shaped shoulder rest for more pleasure and comfort. Elliptical exterior form reflects the interior form.

Dimensions: 1900mm L x 1000mm W x 450mm D

Colour: White

Options: Also available with white enamel multifiller and height adjustable leg system

Material: Kaldewei steel enamel 3.5mm

Waste: Centrally positioned waste. White enamel pop-up waste and overflow supplied

Specifications

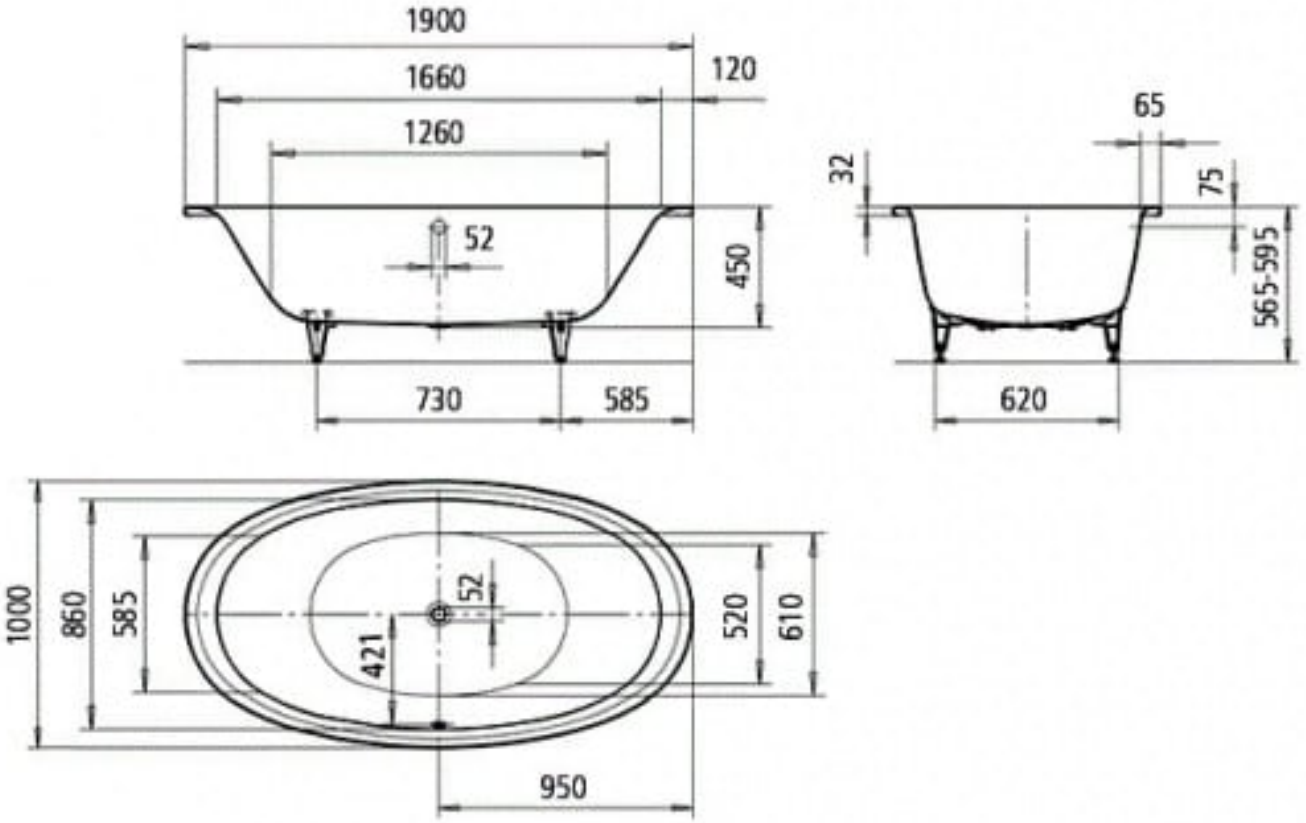
1900
1660
120
1260
52
450
730
585
65
32
75
565-595
620
1000
860
585
52
421
520
610
950