Yokato Toilet Roll Holder

The Yokato range is forged from architectural design and superior craftsmanship. The intricacies of the knurled details, simple geometric lines and slender trims are illuminated by the substance of this iconic design. Both powerful and refined, Yokato offers a sophistication of its own.

Finish: Available in all Brodware finishes.

Specifications

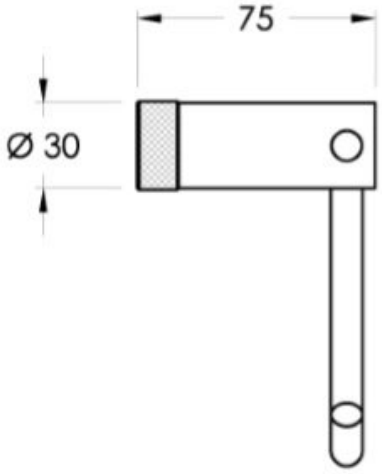

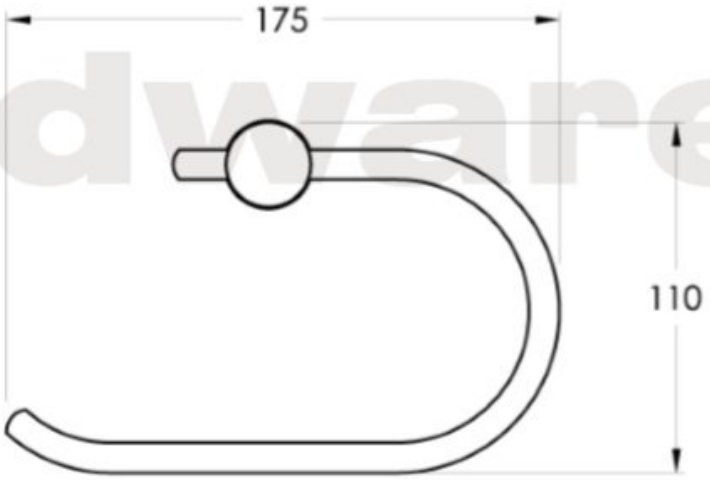

Brodware