Axor Starck Basin Mixer

Designed by Philippe Starck. AXOR Starck is the realisation of a perfect idea. An interpretation of historic well pumps. An archetype. Familiar in terms of shape. Uncompromising in terms of function. A statement about reduction. To the bare essentials. It has been taking the world’s bathrooms by storm for more than two decades now. AXOR Starck was more than just a stroke of genius. AXOR Starck is a milestone in bathroom design. And today, a design classic. Perfection.

Finish: Available in all Axor finishes

WELS: 4 STAR Rated. 7 L/min. Registration number T10850

Specifications

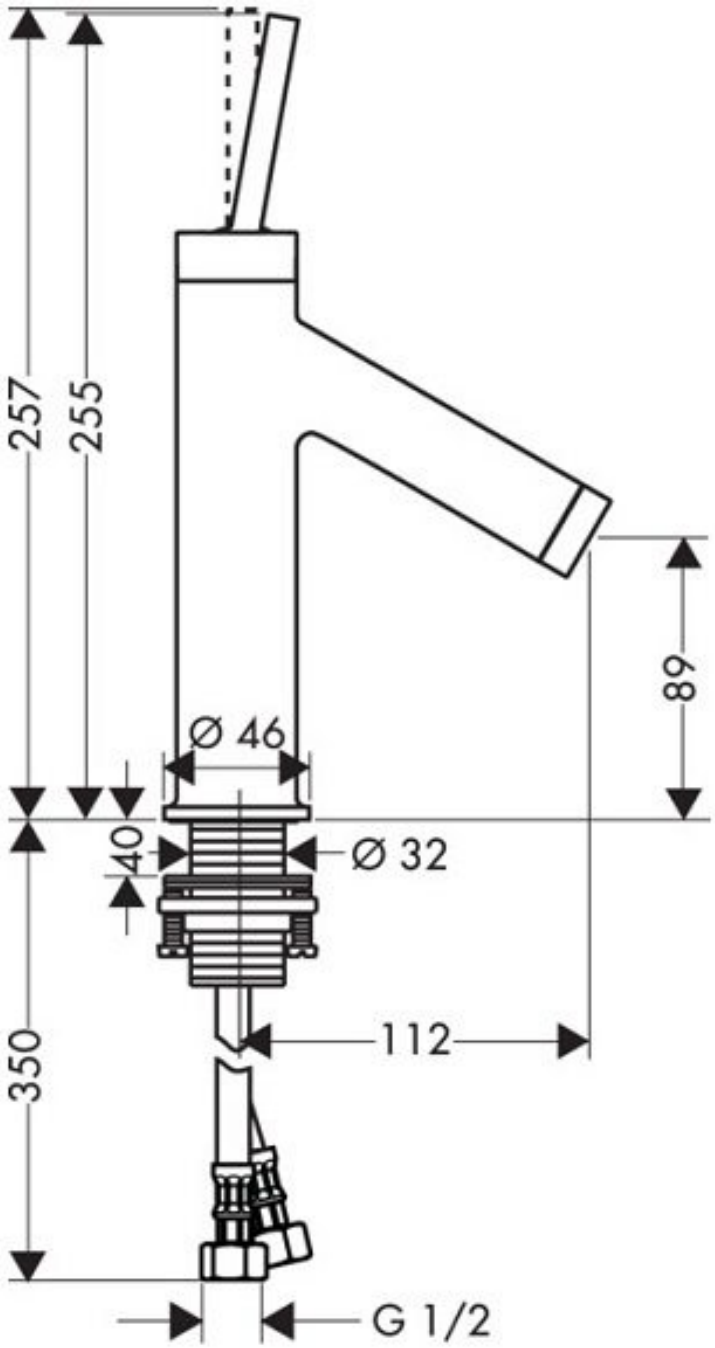
257
255
89
Ø 46
40
Ø 32
350
112
G 1/2