Chambord Louis Single Bowl

French Style sink by Abey. Manufactured from Fireclay with a porcelain glaze.

Features: Single bowl. Insensitive to Temperature. Perfectly Hygienic

Dimensions: 595mm W x 480mm D (Bowl size: 514mm W x 400mm D x 220mm H)

Colour: White

Specifications

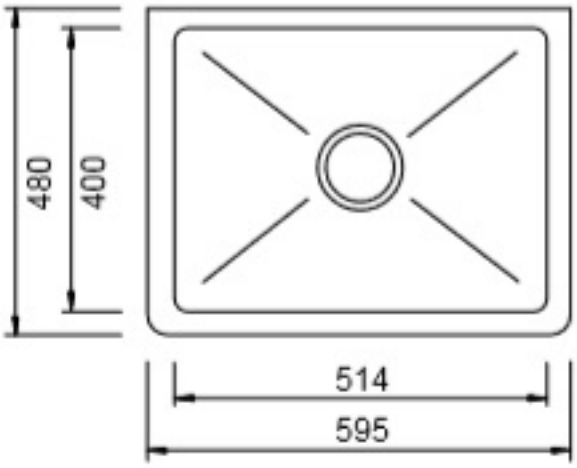
480
400
514
595