Durastyle Undercounter

However, individuality does not mean making an impression with all means. Simply an ambiance which reflects itself, gives your personality air to breathe and space to do your own thing.
Such as DuraStyle by Duravit: Designed by Matteo Thun & Partners, the range of bathrooms is revealed as deliberately discreet – and blends harmoniously into practically any ambiance for this very same reason.

Dimensions: 400mm W x 400mm D x 150mm H

Colour: White

Material: Vitreous China

Waste: 32mm overflow waste (supplied separately)

Tapholes: 0 taphole

Installation: Fixings included, ground for undercounter mounting

Specifications

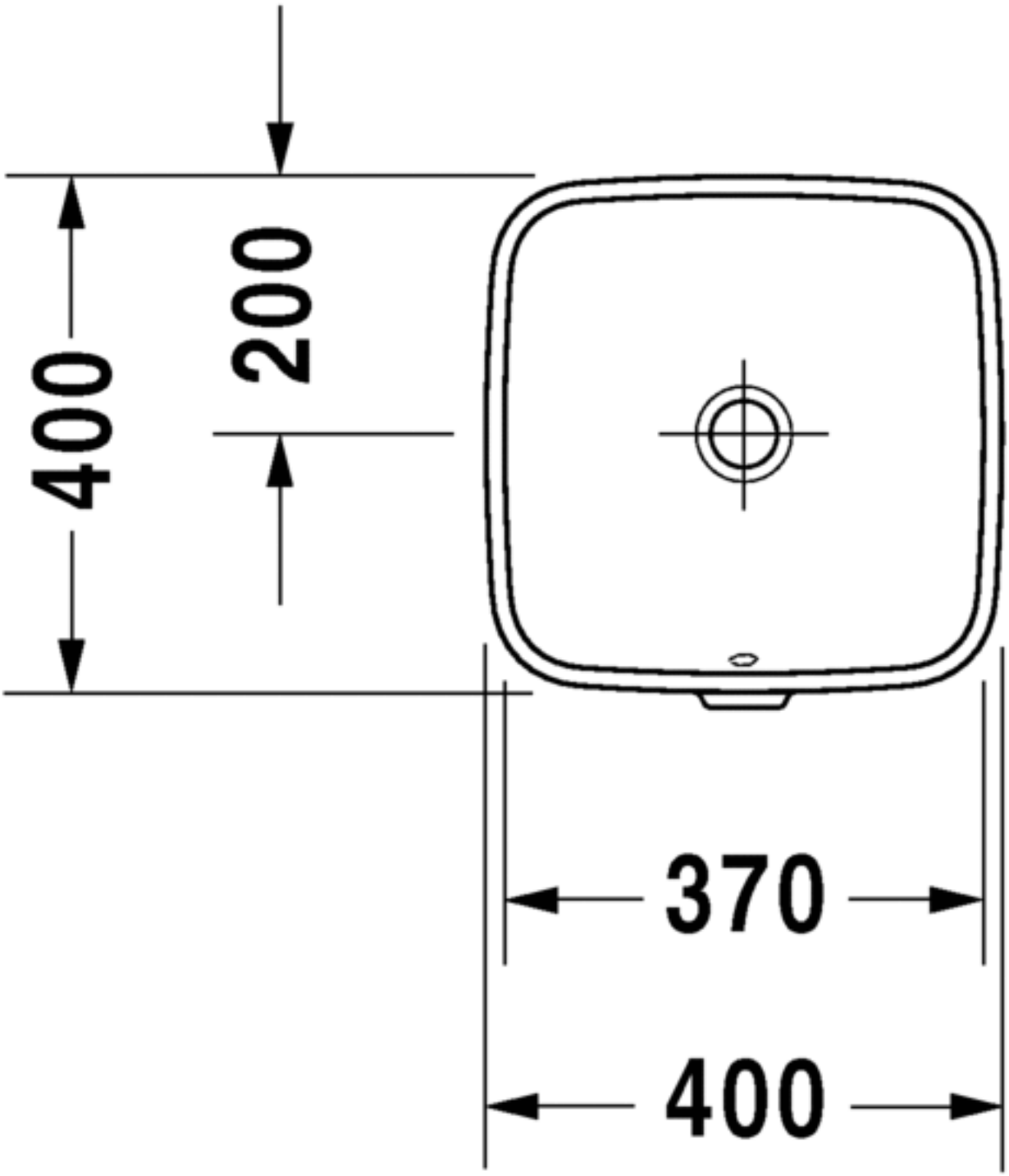
400
200
370
400