Winslow Wall Set 210mm

Delicate detail abounds in the Winslow range, with a French-inspired design aesthetic and fine workmanship coming together to evoke an old world ambience. The Winslow Cross uses the clean brilliance of inscribed porcelain to crown the exquisitely crafted metal cross. The white porcelain finish of the Winslow Lever creates a timeless effect and the ability to turn the taps on and off easily with a brush of one’s hand makes the Winslow lever an invaluable addition to the modern home.

Finish: Available in all Brodware finishes.

Options: Available with or without flow control spout. Cross Handles with Easiglide® 3/4 turn ceramic spindles. Metal lever handle with Easiglide® 1/4 turn ceramic spindles. White Porcelain or Black Porcelain lever handle with Easiglide® 1/4 turn ceramic spindles.

WELS: 6 STAR Rated. 4.5 L/min. Registration number T21257

Specifications

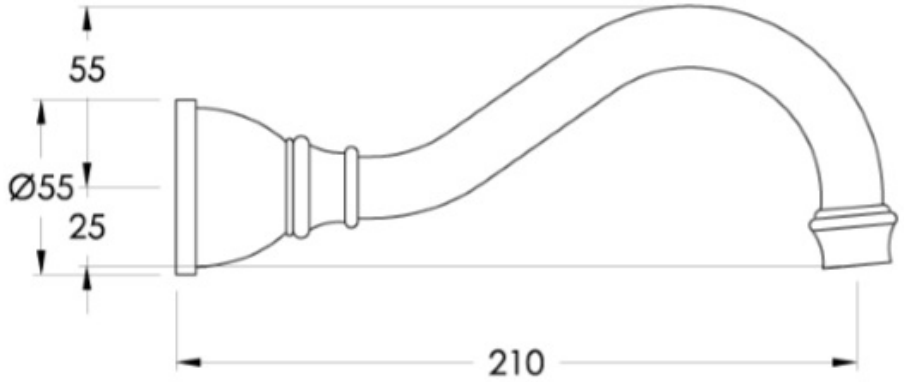
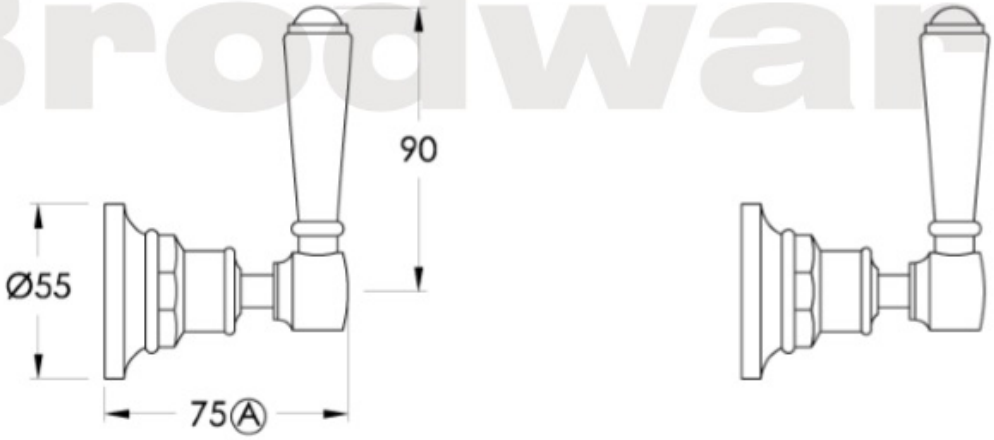
Brodware