Neu England Pillar Taps

Full of character, and wonderfully evocative. Indulge the senses with shapes that generate the warm feeling of home. A design that borrows from earlier times yet is certified to the latest water saving WELS standards

Finish: Available in all Brodware finishes.

Options: Cross Handles with Easiglide® 3/4 turn ceramic spindles. Metal lever handle with Easiglide® 1/4 turn ceramic spindles. White Porcelain or Black Porcelain lever handle with Easiglide® 1/4 turn ceramic spindles.

WELS: 6 STAR Rated. 4.5 L/min. Registration number TM29879

Specifications

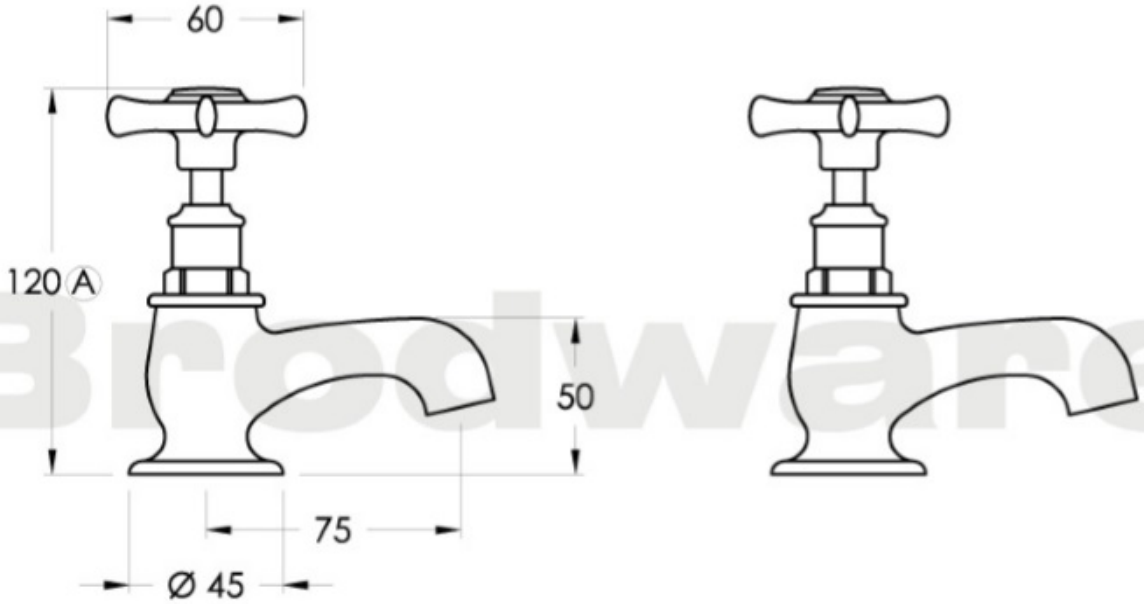

Brodware