Eleganza Wall Mount Tumbler

The elegant objects with which we surround ourselves say something about us and embody the essential need for style that we express throughout our daily lives. Gessi has embraced this aspiration by creating Eleganza, a refined collection for the bathroom inspired by the pursuit of tangible design to shape the intangible concept of elegance.

Finish: Polished chrome, Antique Brass PVD, Black Metal PVD, Brushed Gold, Brushed Nickel, Copper PVD, Gold, Stained Gold.

Features: Manufactured and Designed in Italy.

Specifications

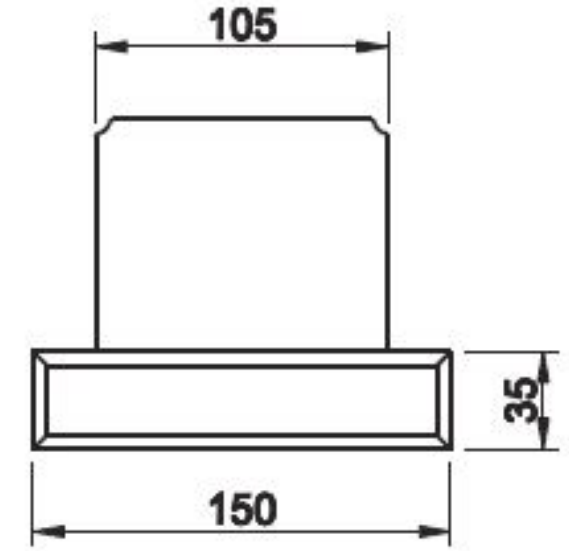
105
35
150

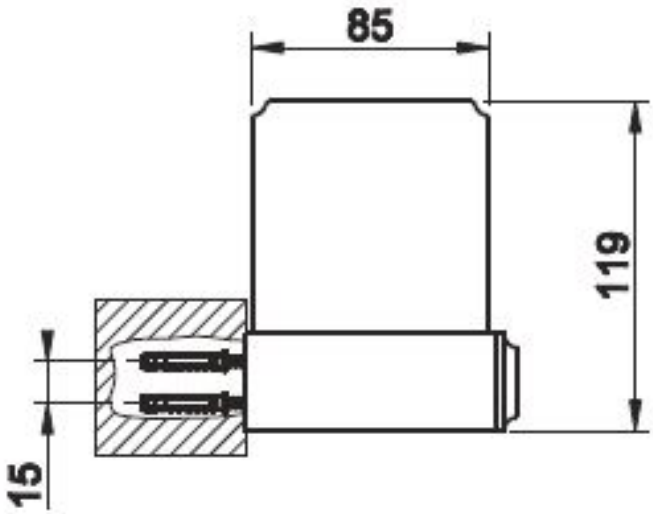
85
119
15

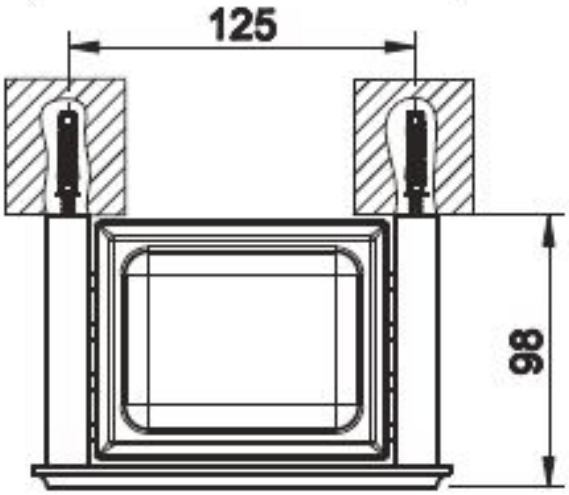
125
98