Industrica Lever Kitchen Set

Inspired by the raw Industrial Era, the Industrica collection looks back through time to offer a sophistication of its own.
Embracing natural materials, the architectural lines and organic textures express a whole new aesthetic language. The repetition of circular shapes enhances the industrial feel, while presenting a distinct style and a unified modern form for all urbanities.

Features: Easiglide® ceramic spindles. Square swivel spout. Patented Broclean® filtration system.

Finish: Available in all Brodware finishes.

WELS: 5 STAR Rated. 6 L/min. Registration number TM27926

Specifications

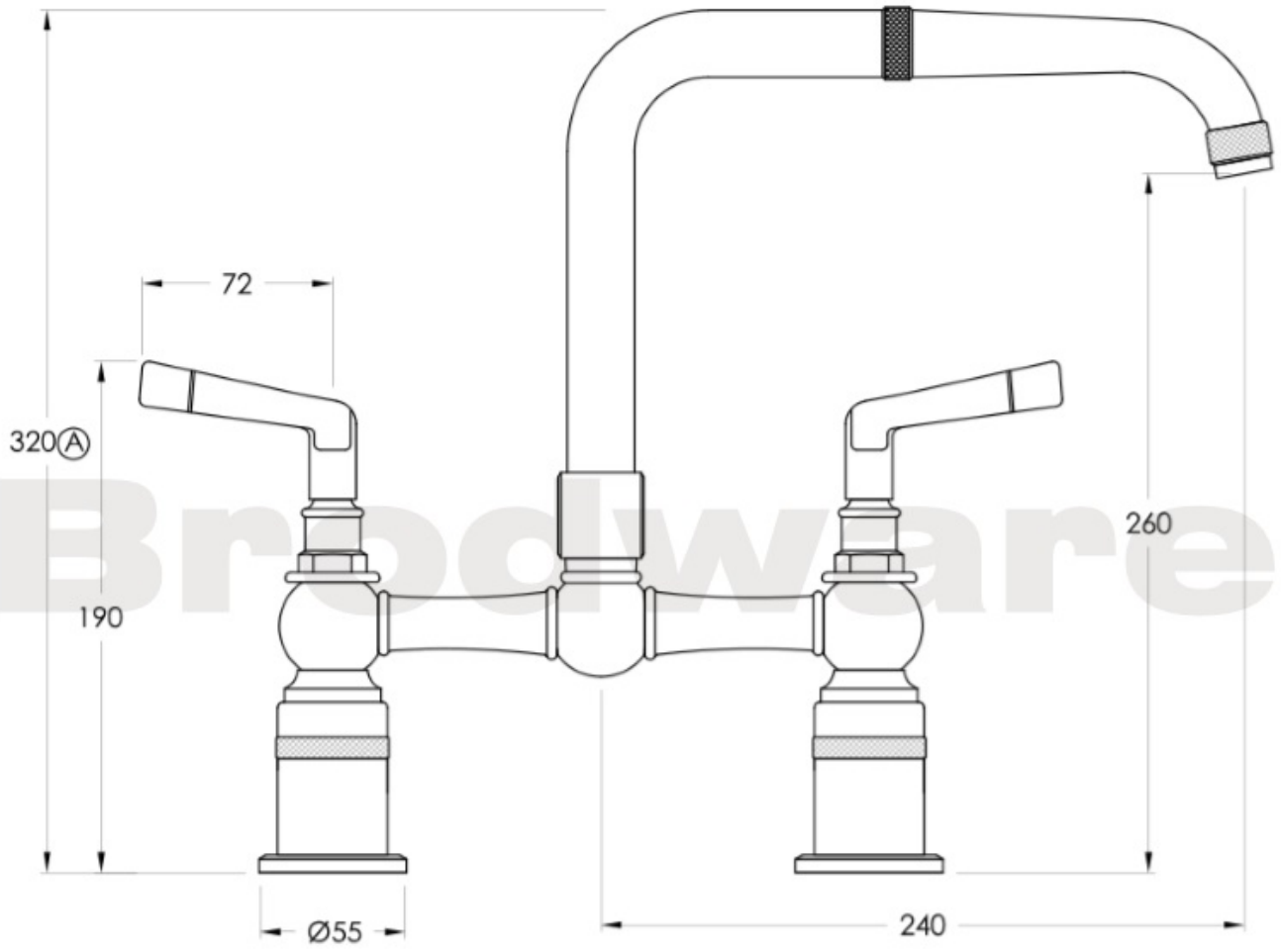

Brodware