Vola 060 Wall Shower

Originally designed by Arne Jacobsen in the 1960’s this iconic tapware range has stayed contemporary ever since and is renowned the world over. Made in Denmark, it has been specified in many of the world’s most amazing commercial and residential fit-outs. Owning Vola is owning a piece of design history.

Features: Head shower, round, wall mounted

Finish: Available in all Vola finishes.

WELS: 3 STAR Rated. 9 L/min. Registration number S13026
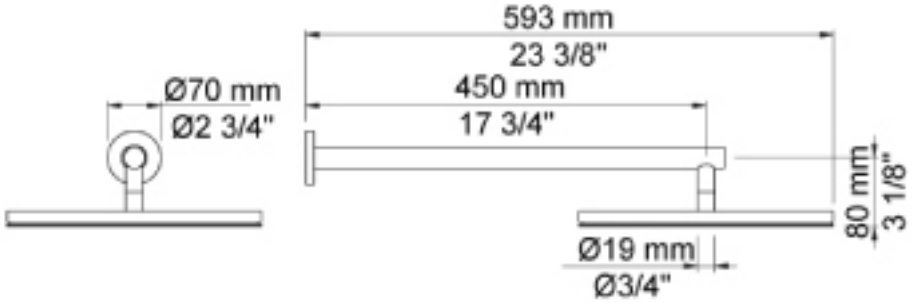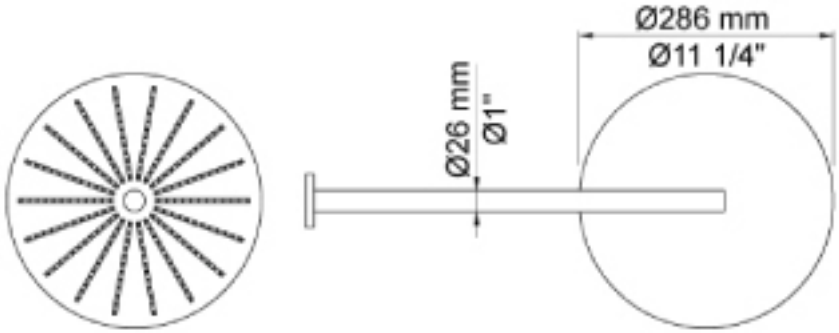
Specifications